UNIVERSITY OF CAMBRIDGE INTERNATIONAL EXAMINATIONS
General Certificate of Education
Advanced Subsidiary Level and Advanced Level

CANDIDATE NAME	
CENTRE NUMBER	
CANDIDATE NUMBER	

0765568193

PHYSICS **9702/31**

Paper 31 Advanced Practical Skills 1 **October/November 2007**

2 hours

Candidates answer on the Question Paper.

Additional Materials: As listed in the Confidential Instructions.

READ THESE INSTRUCTIONS FIRST

Write your Centre number, candidate number and name on all the work you hand in.
Write in dark blue or black pen.
You may use a soft pencil for any diagrams, graphs or rough working.
Do not use staples, paper clips, highlighters, glue or correction fluid.
DO **NOT** WRITE IN ANY BARCODES.

Answer **both** questions.
You will be allowed to work with the apparatus for a maximum of one hour for each question.
You are expected to record all your observations as soon as these observations are made, and to plan the presentation of the records so that it is not necessary to make a fair copy of them. The working of the answers is to be handed in.
Additional answer paper and graph paper should be submitted only if it becomes necessary to do so.
You are reminded of the need for good English and clear presentation in your answers.

At the end of the examination, fasten all your work securely together.
All questions in this paper carry equal marks.

For Examiner's Use	
1	
2	
Total	

This document consists of **10** printed pages and **2** blank pages.

© UCLES 2007

For Examiner's Use

You may not need to use all of the materials provided.

1 In this experiment you will measure the potential difference across a length l of resistance wire joined to a series resistor R. You will use the results of your experiment to determine the current I in the circuit.

(a) (i) Use a micrometer to measure the diameter d of the resistance wire. A small section of the wire has been left protruding from the end of the rule for this purpose.

d = ...

(ii) Hence determine the cross-sectional area A of the resistance wire.

A = ...

© UCLES 2007

(b) (i) Connect the circuit shown in Fig. 1.1. The flying lead X may be placed anywhere along the length of the wire.

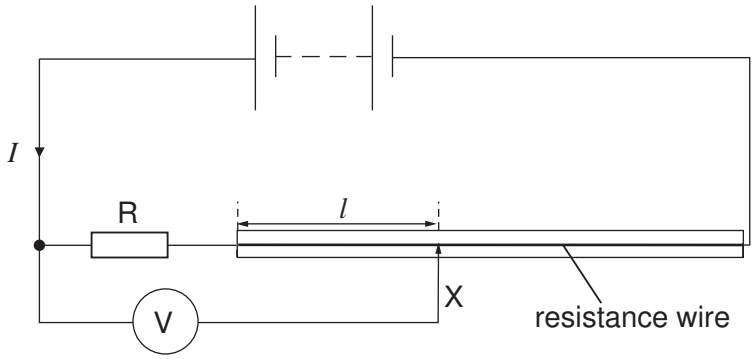

Fig. 1.1

(ii) Record the value of the potential difference V and length l of the wire.

V = ...

l = ...

(c) Change the position of X to give a new length l and repeat **(a) (ii)** until you have six sets of readings for V and l. Include values of $\frac{l}{A}$ in your table of results.

(d) (i) Plot a graph of V (y-axis) against $\frac{l}{A}$ (x-axis).

(ii) Draw the line of best fit.

(iii) Determine the gradient and the y-intercept of the graph.

gradient = ...

y-intercept = ...

© UCLES 2007

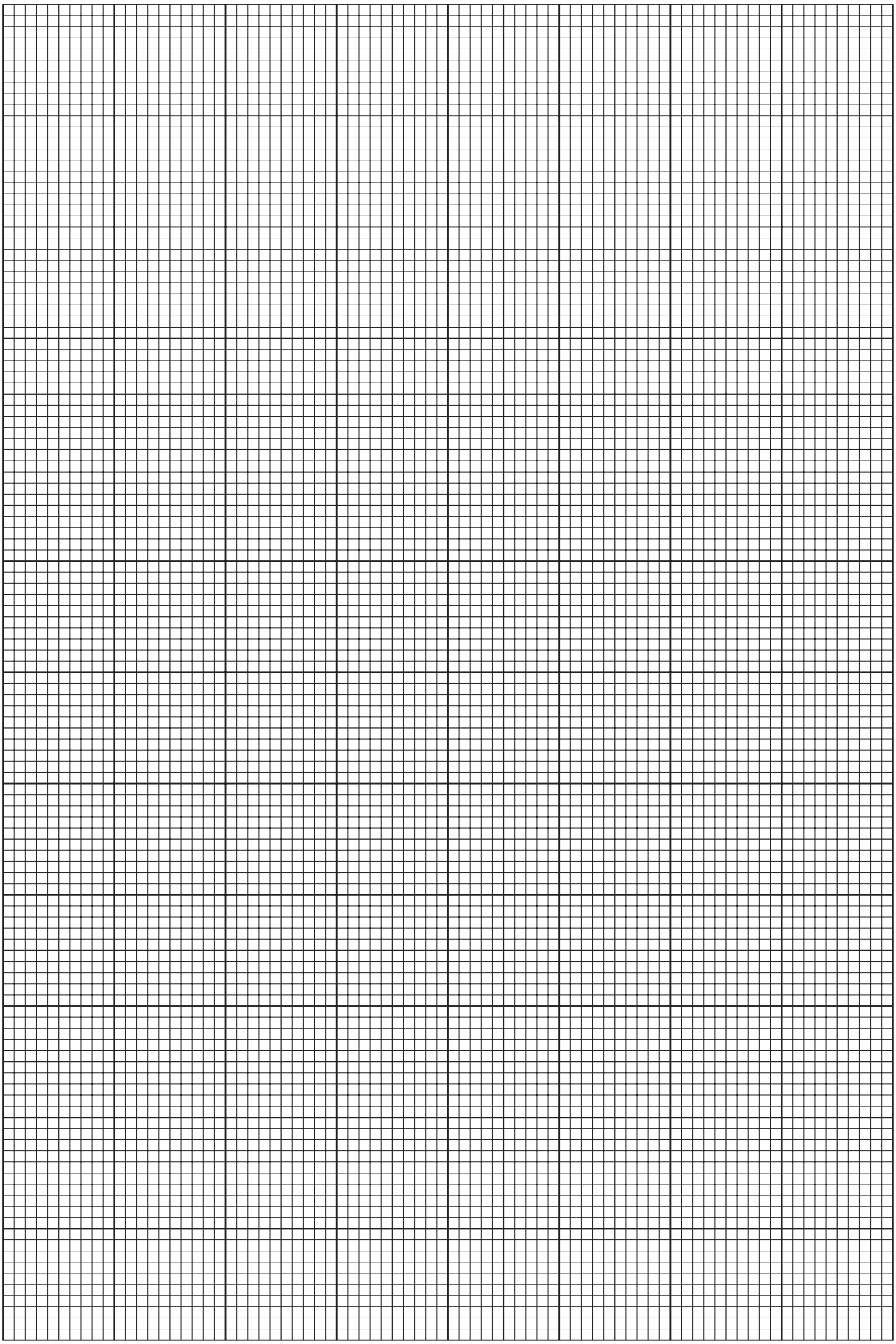

(e) V and l are related by the equation

$$V = \frac{\rho I l}{A} + k$$

where ρ is the resistivity of the material of the wire, A is the cross-sectional area of the wire and k is a constant. The value of ρ is given on a card.

Using your answers from **(d) (iii)**, determine values for k and I. You should include units where appropriate.

k = ...

I = ...

You may not need to use all of the materials provided.

2 In this experiment you will investigate the movement of a loaded rule that is pulled down below its equilibrium position and then released.

(a) (i) Mount a loaded metre rule horizontally using a clamp as shown in Fig. 2.1.

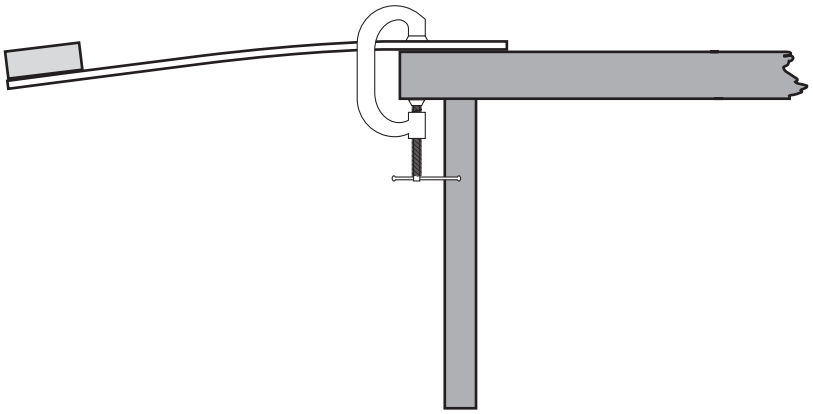

Fig. 2.1

(ii) Position a metre rule vertically next to the loaded rule as shown in Fig. 2.2.

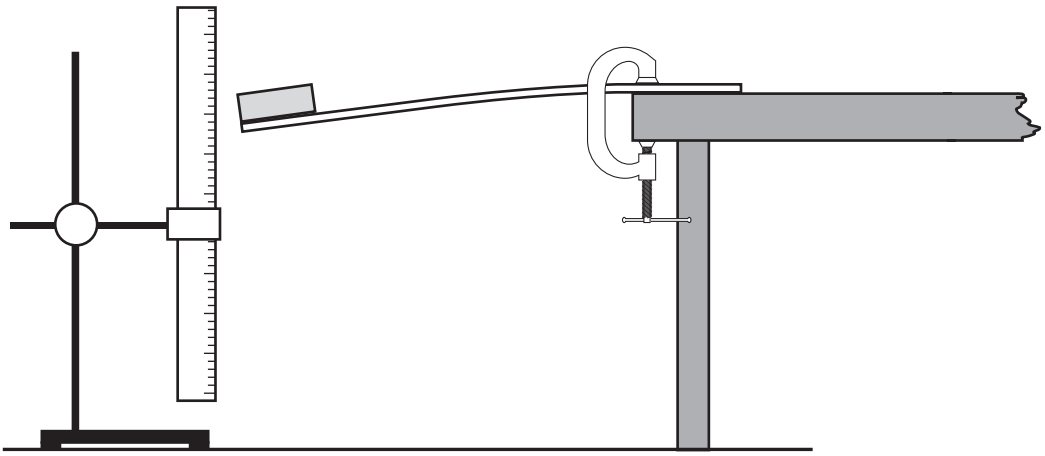

Fig. 2.2

© UCLES 2007

(iii) Record the equilibrium position of the end of the loaded rule.

equilibrium position = ... cm

(b) Depress the rule so that it is a distance d below the equilibrium position, where $1.0\,\text{cm} < d < 5.0\,\text{cm}$. Release the rule. Measure and record the highest position to which the rule rises. Hence determine the distance x, as shown in Fig. 2.3.

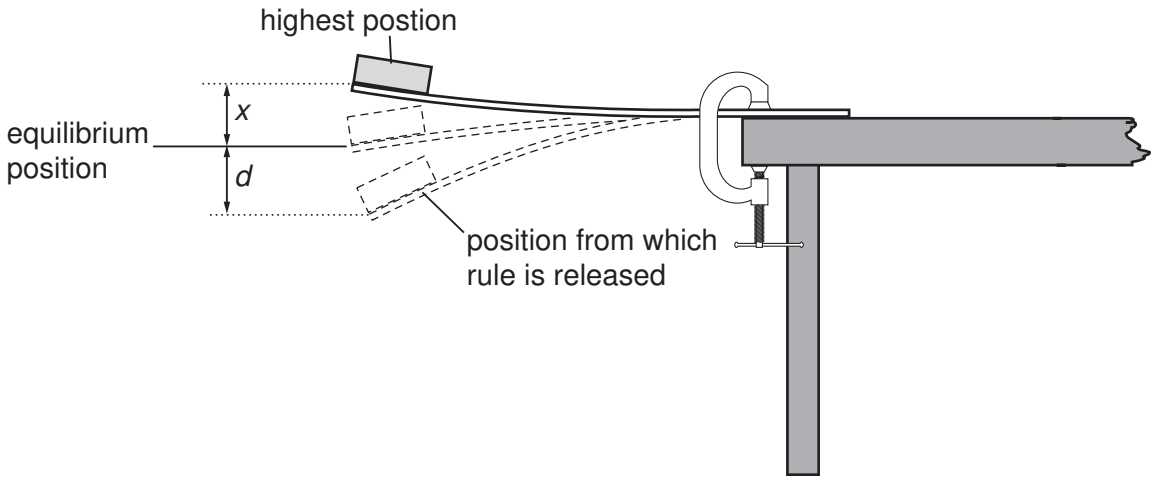

Fig. 2.3

d = ... cm

highest position = ... cm

x = ... cm

(c) Estimate the percentage uncertainty in x.

percentage uncertainty in x = ...

For Examiner's Use

(d) Repeat **(b)** with a different value of *d*.

d = ... cm

highest position = ... cm

x = ... cm

(e) Do the results of your experiment indicate that *x* is directly proportional to *d* within the limits of experimental accuracy? Explain your reasoning clearly.

.....

.....

.....

.....

(f) (i) State four sources of error or limitations of the procedure in this experiment.

1. .....

.....

2. .....

.....

3. .....

.....

4. .....

.....

(ii) Suggest four improvements that could be made to this experiment. You may suggest the use of other apparatus or different procedures.

1. .....

.....

2. .....

.....

3. .....

.....

4. .....

.....

BLANK PAGE

BLANK PAGE

Permission to reproduce items where third-party owned material protected by copyright is included has been sought and cleared where possible. Every reasonable effort has been made by the publisher (UCLES) to trace copyright holders, but if any items requiring clearance have unwittingly been included, the publisher will be pleased to make amends at the earliest possible opportunity.

University of Cambridge International Examinations is part of the Cambridge Assessment Group. Cambridge Assessment is the brand name of University of Cambridge Local Examinations Syndicate (UCLES), which is itself a department of the University of Cambridge.